View	/					/
Dimension	Basic dimension	0 < a ⩽ 6	6 < a ⩽ 30	30 < a ⩽ 120	120 < a ⩽ 400	±0.5 °
Key Dimension	Tolerance	±0.1	±0.2	±0.3	±0.5	

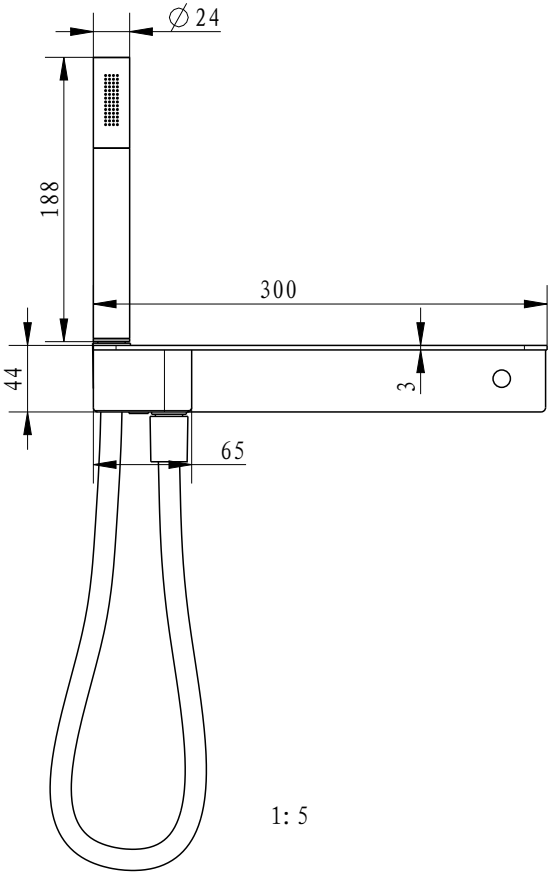

1: 5

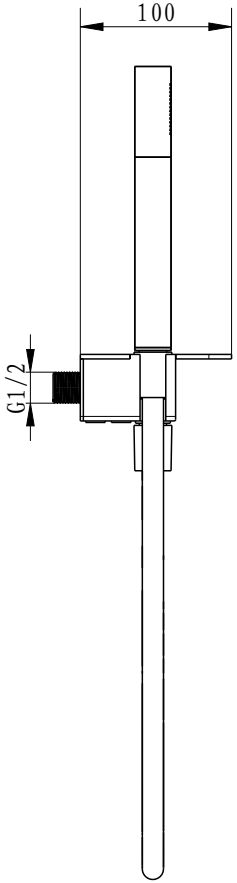

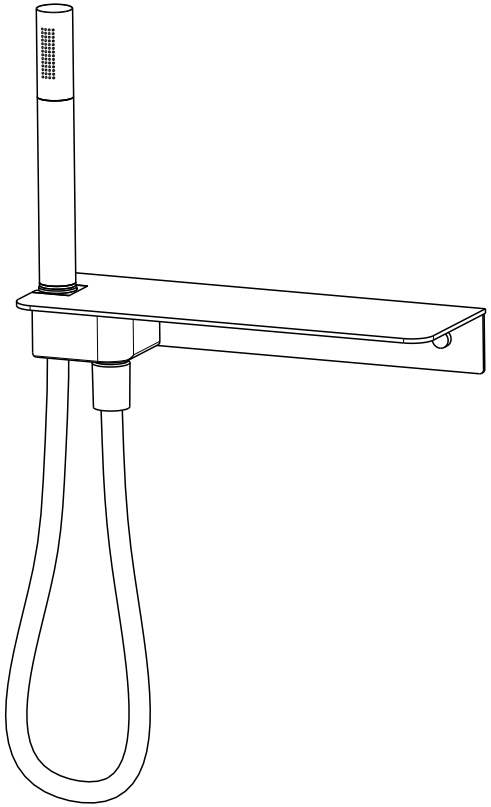

1: 5